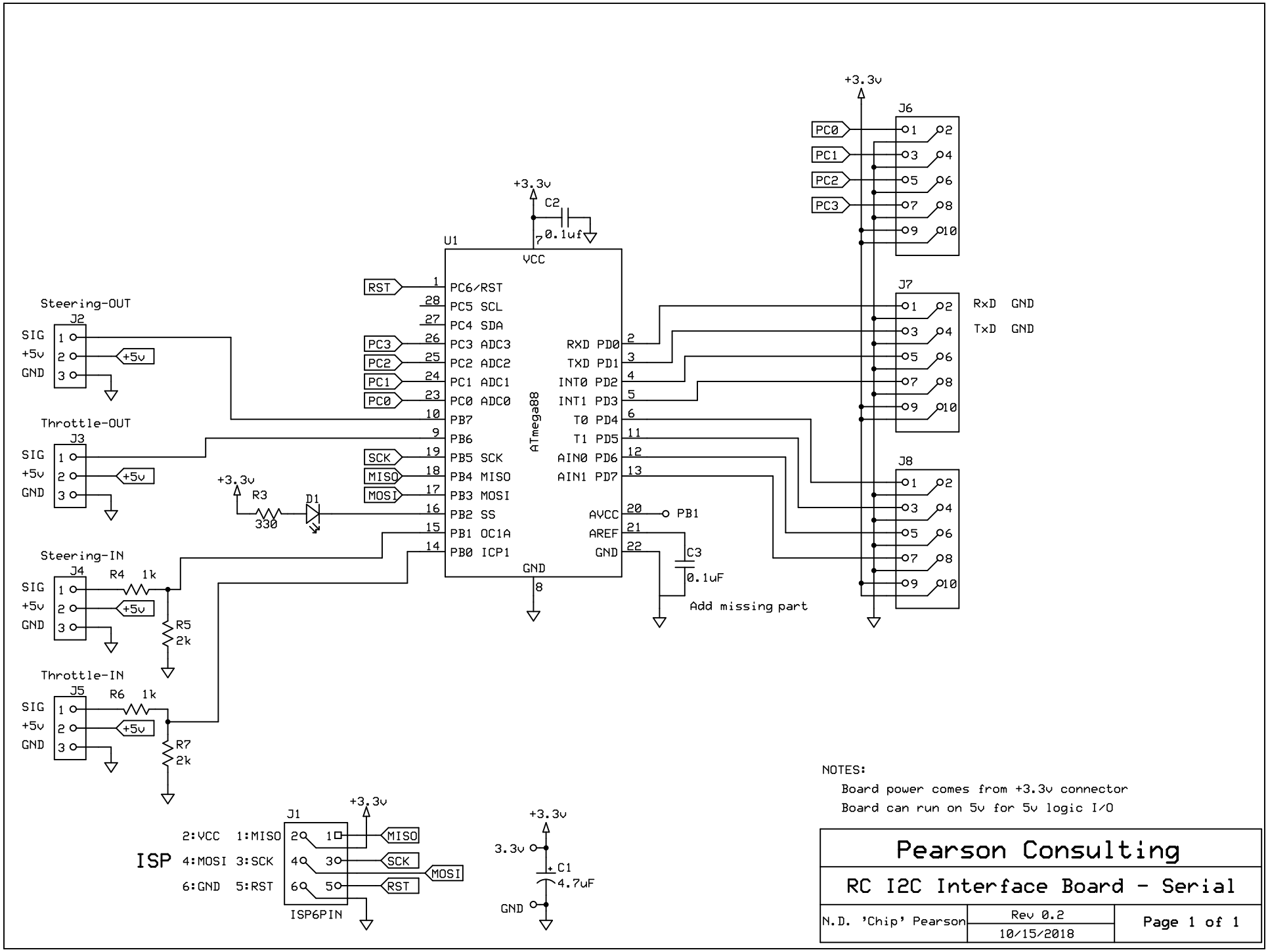

NOTES:

Board power comes from +3.3v connector

Board can run on 5v for 5v logic I/O

Pearson Consulting		
RC I2C Interface Board - Serial		
N.D. 'Chip' Pearson	Rev 0.2 10/15/2018	Page 1 of 1